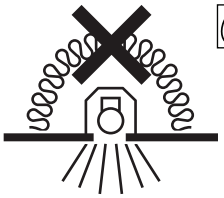

IS500 | ~220-240 V 50/60 Hz

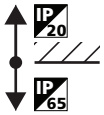

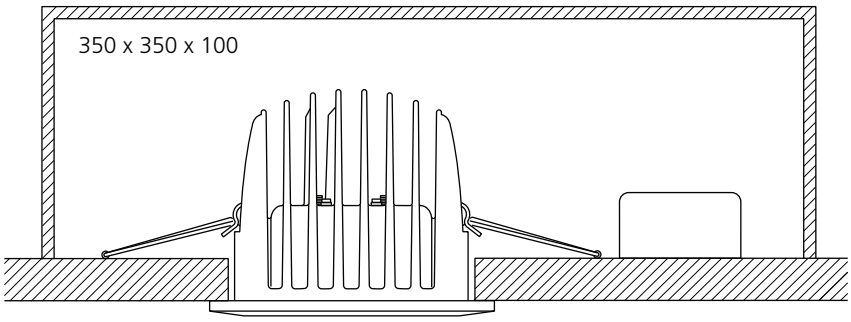

1a 3097100 3097101
3097102 3097103
3097108

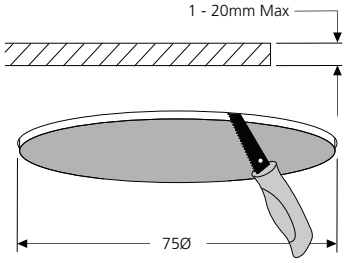

1b 3097104 3097105
3097106 3097107

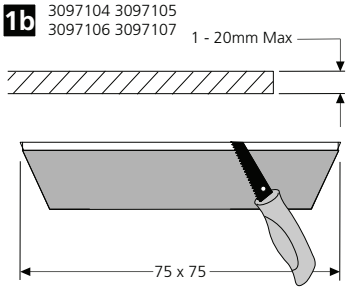

2 230-240V

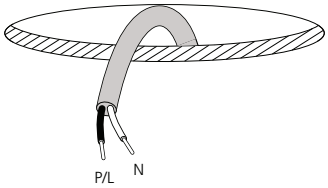

3

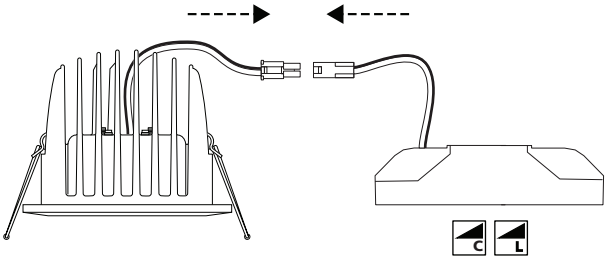

4

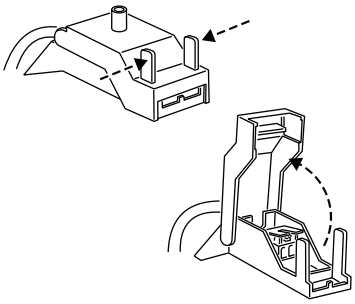

5 230-240V

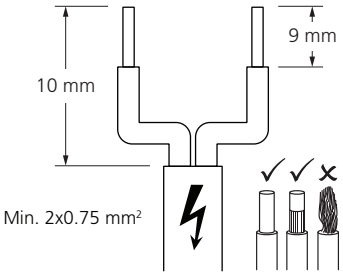

6 230-240V

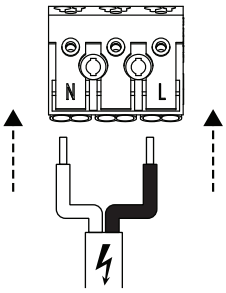

7a 230-240V

40 Max.at 3A Wiring

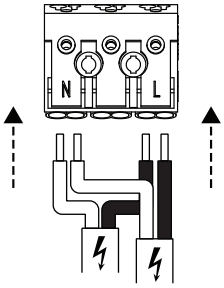

7b

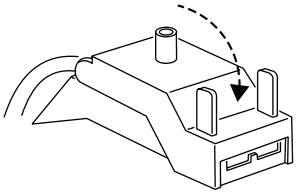

8

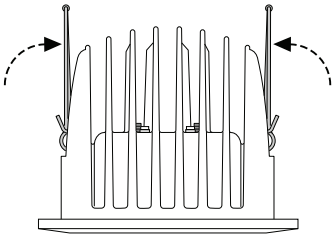

9

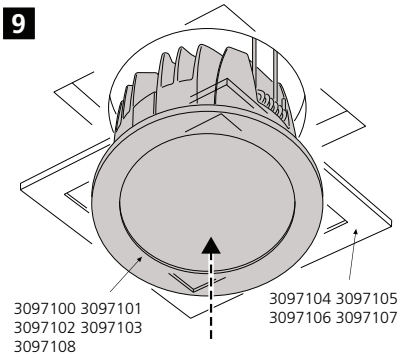

!

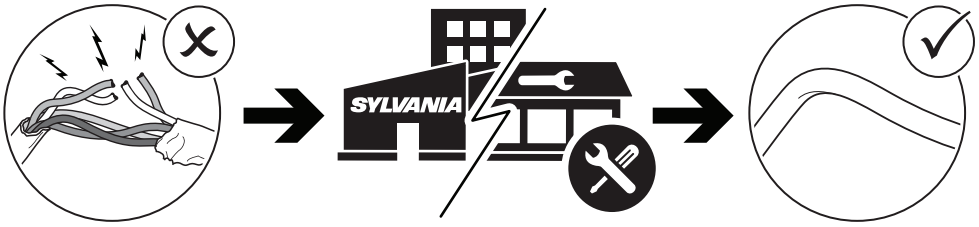

Lumiance