Giotto 235 LED Recessed

IS**1454**C

3032841, 42 DB
3032863, 64 DALI
3032889, 90 EB

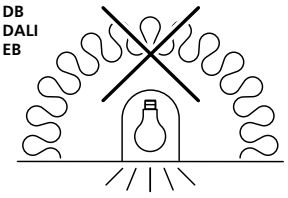

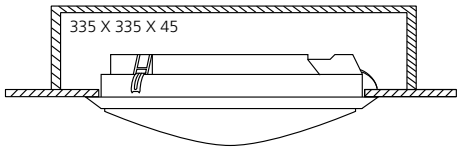

1

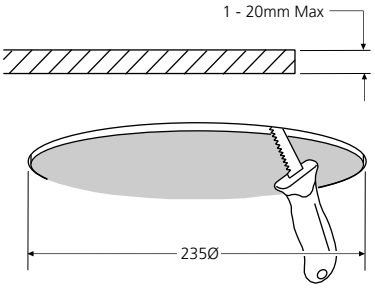

2

STD
230-240V~
2 x 0.75mm² Min. P/L, N.

DIM/DALI
230-240V~
2 x 0.75mm2 Min. P/L, N
+
2 x 0.75mm2 Min. +,-.

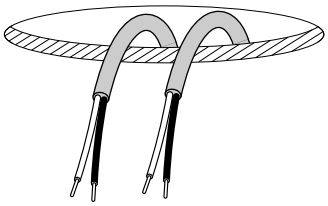

3

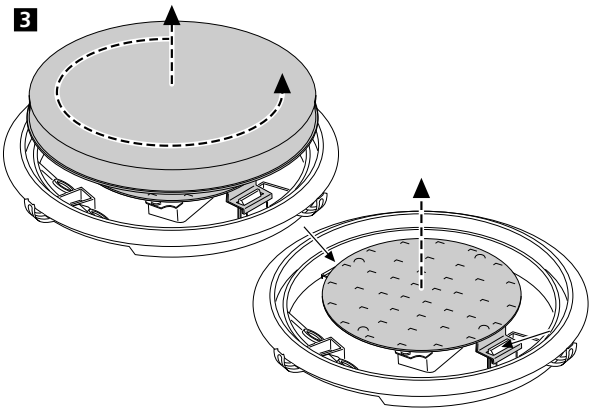

4

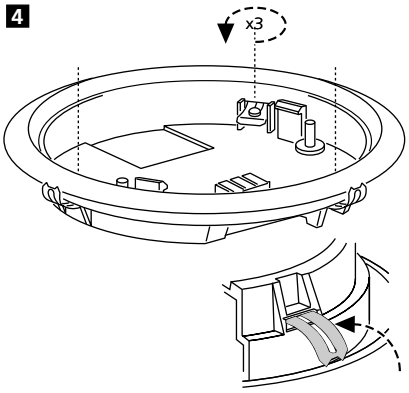

5

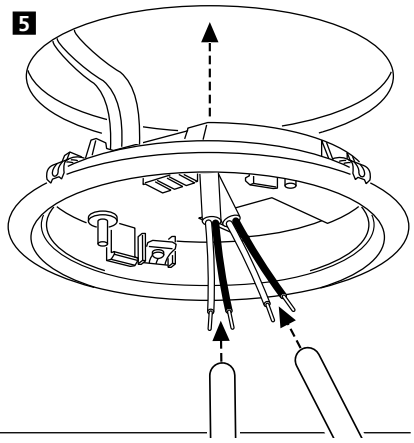

6

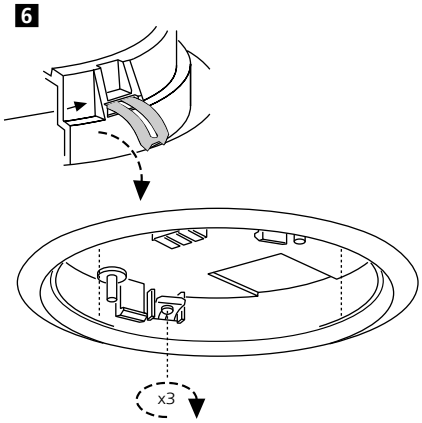

7 **3032841, 42 DB**
3032863, 64 DALI
3032889, 90 EB

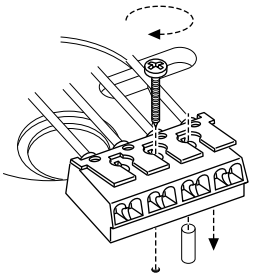

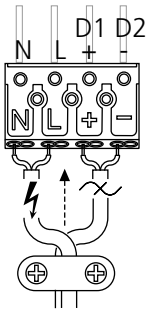

8

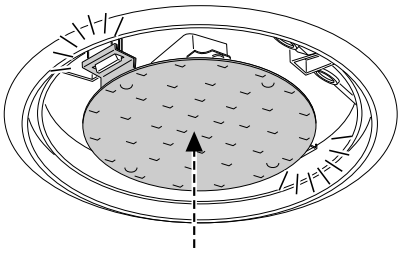
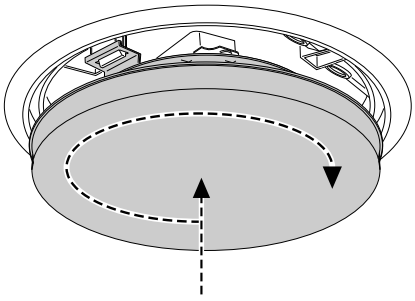
9