Mini Continuum II - Direct/Indirect

IS**1924**A

2059332 - 2059339
2093089 - 2093112

IS1045 | IS1600 | IS500 | 230-240V~ 50/60Hz

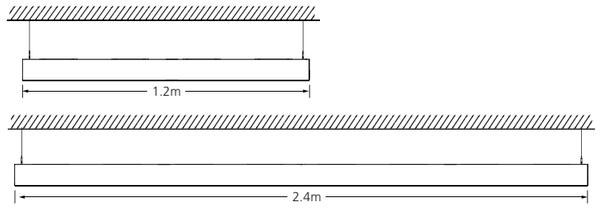

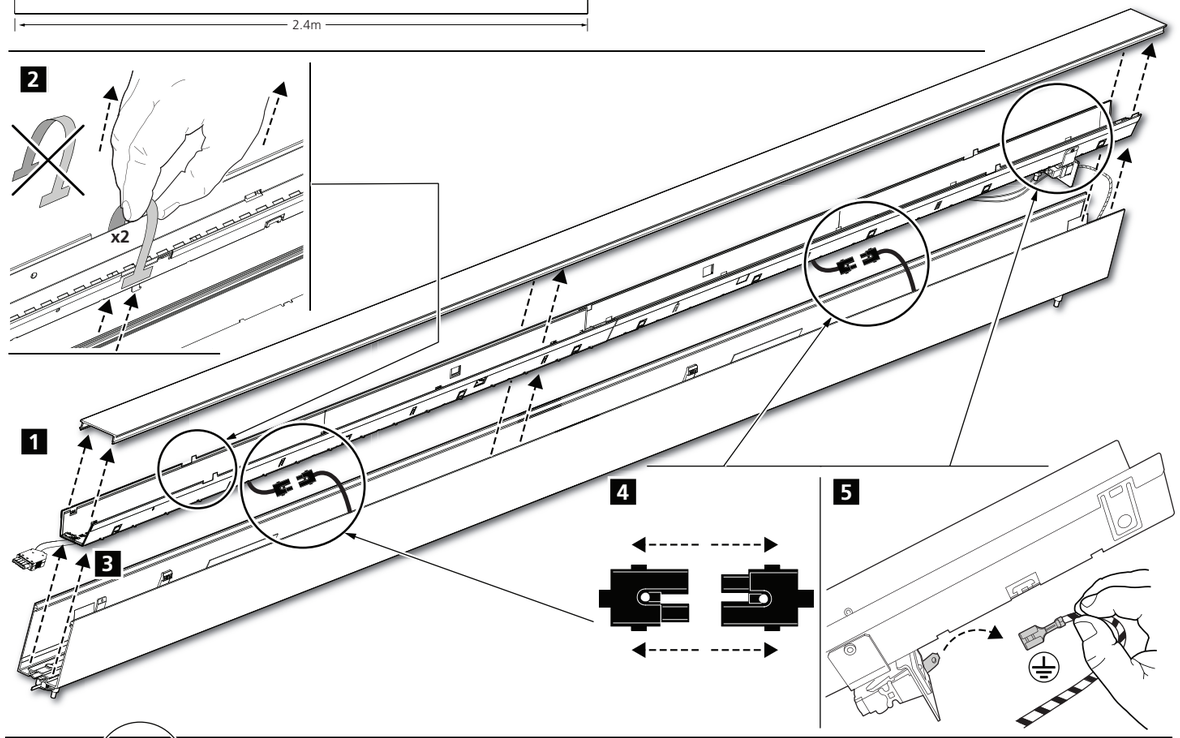

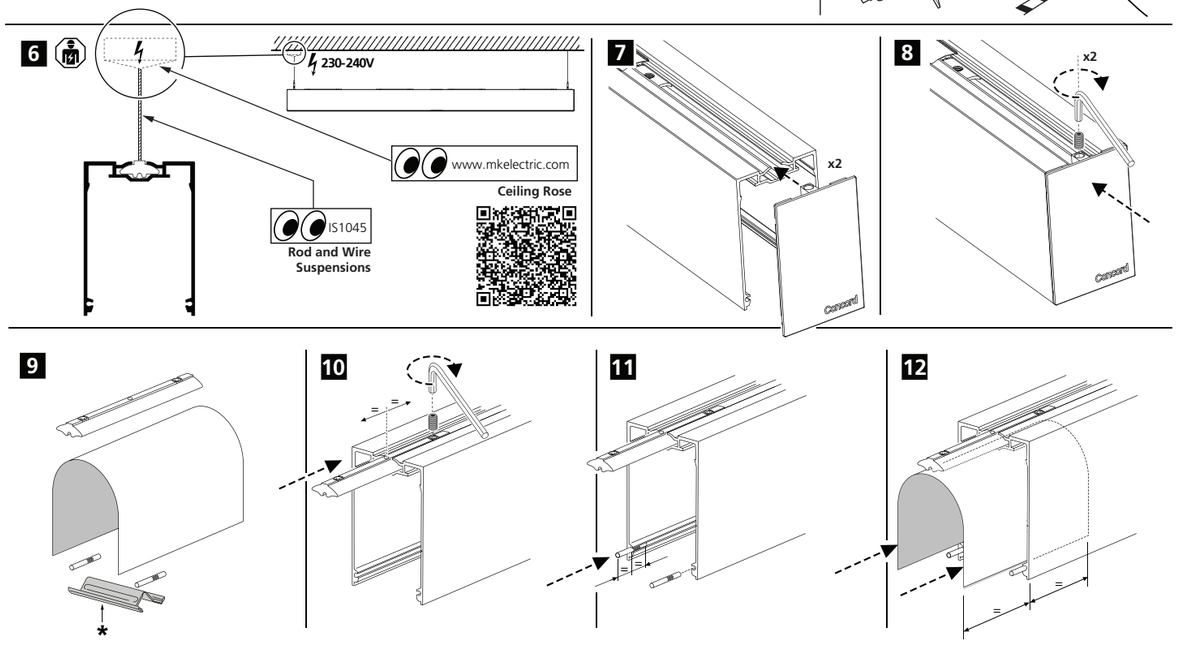

Concord
by SYLVANIA

© Feilo Sylvania Europe Limited 03.15

13

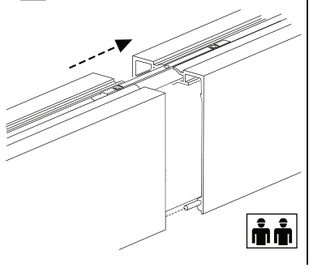

14

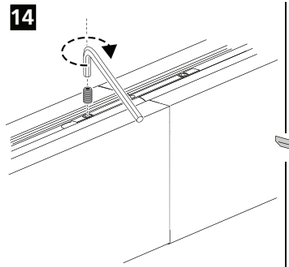

15

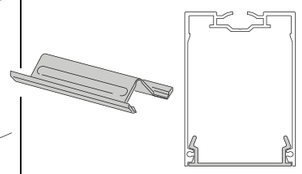

16

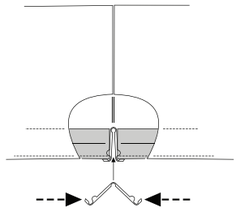

17 230-240V~

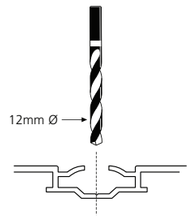

18

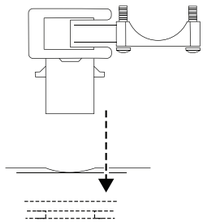

19

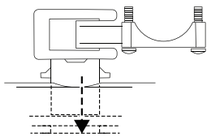

20

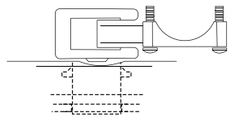

21

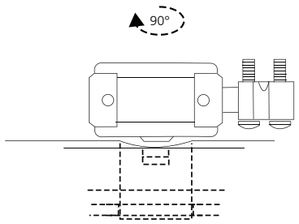

22

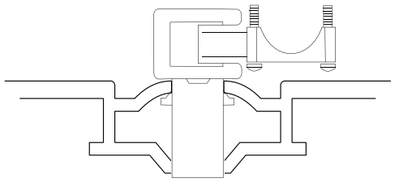

22

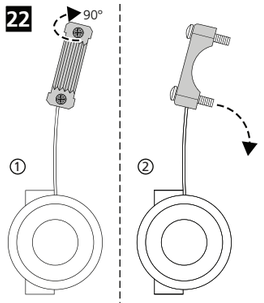

?

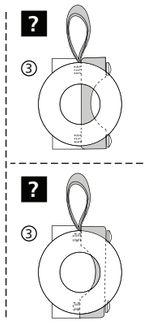

21

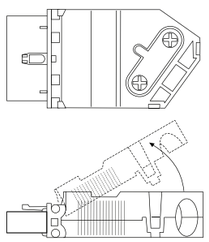

22 230-240V~

2059332
2059334
2059336
2059338
2093091
2093093
2093095
2093097
2093099
2093101
2093103
2093105
2093107
2093109
2093111

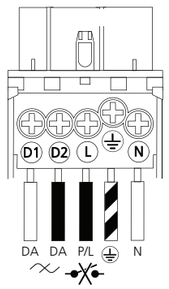

5 x 1.5mm² Min.

22 230-240V~

2059333
2059335
2059337
2059339
2093090
2093092
2093094
2093096
2093098
2093100
2093102
2093104
2093106
2093108
2093110
2093112

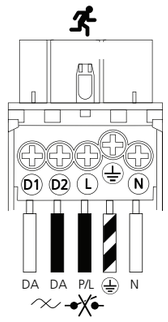

5 x 1.5mm² Min.

23

24

25

27

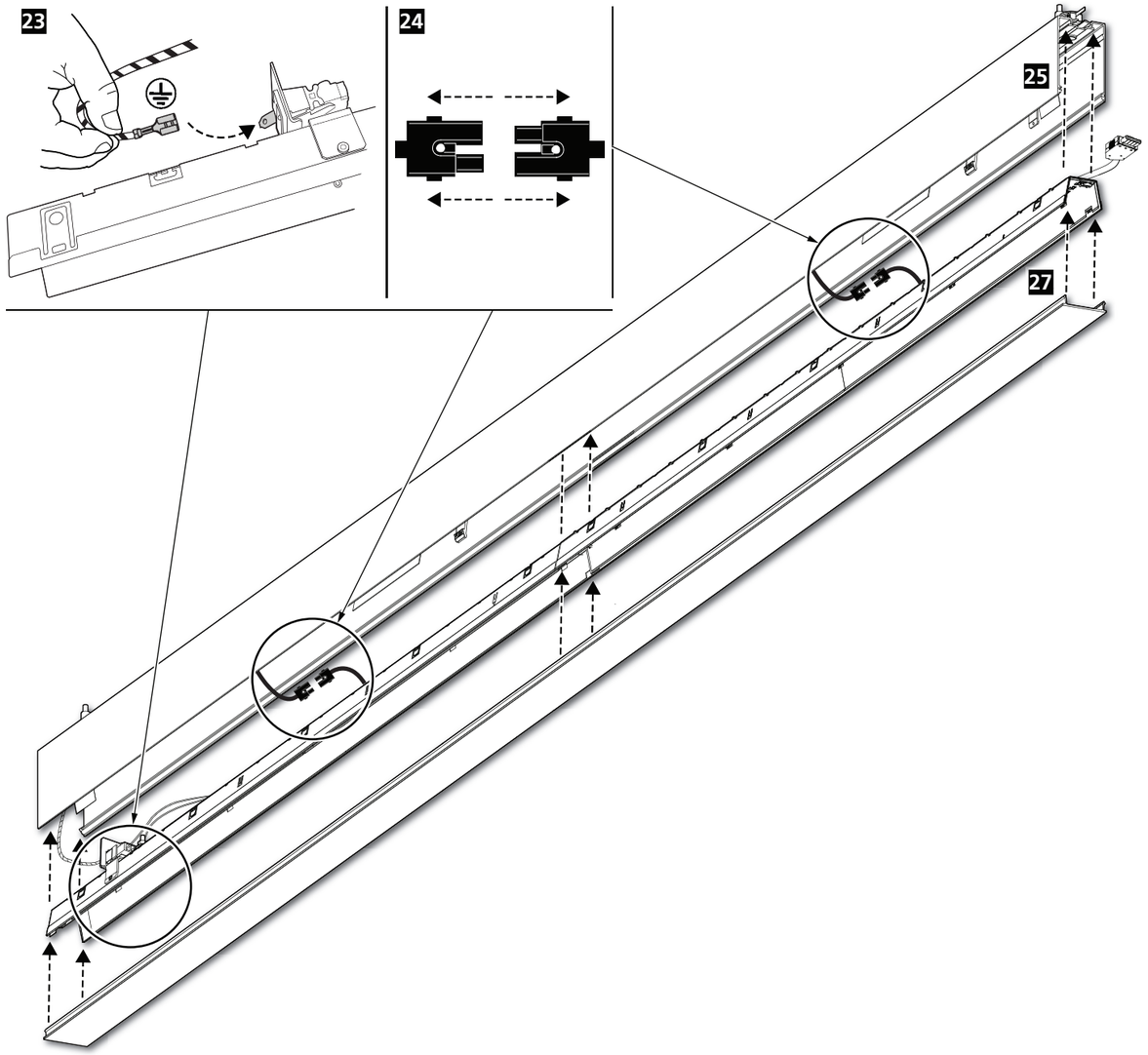
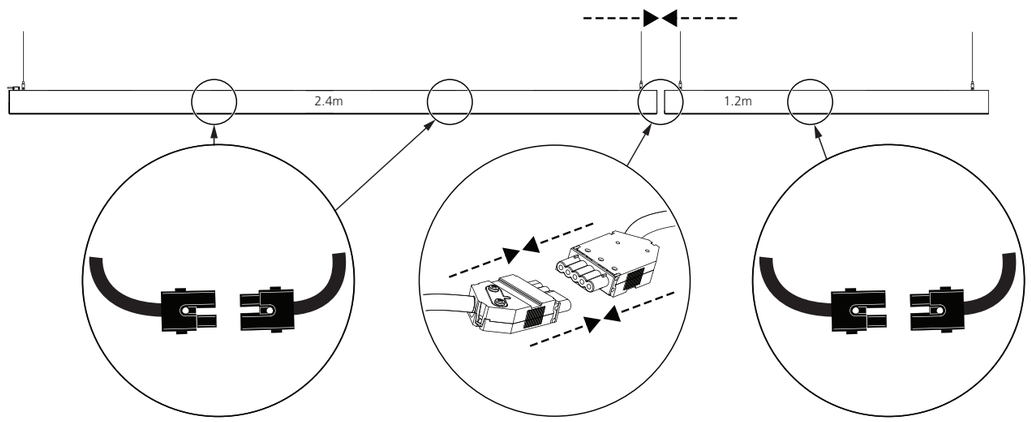
?