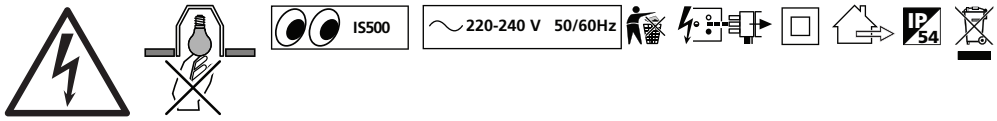
IS500
220-240 V 50/60Hz
IP 54

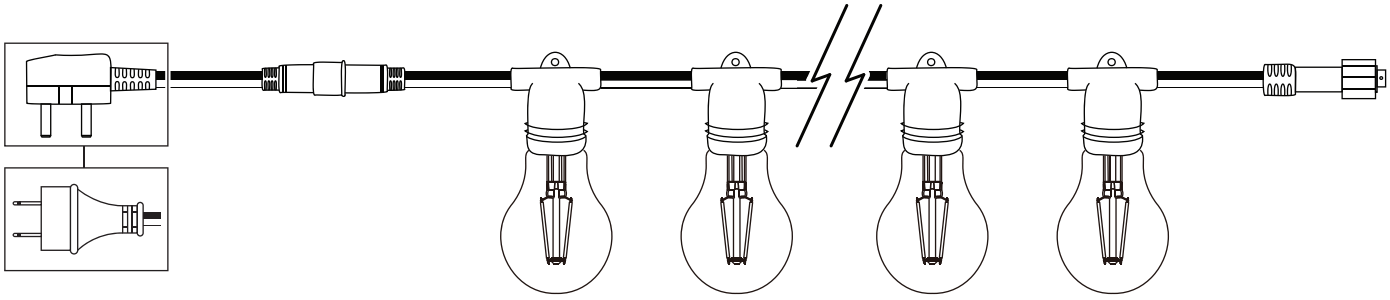

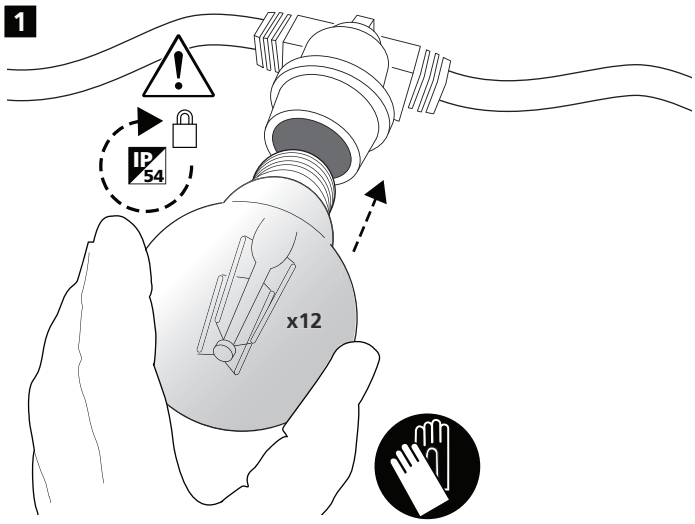
1
IP 54
x12

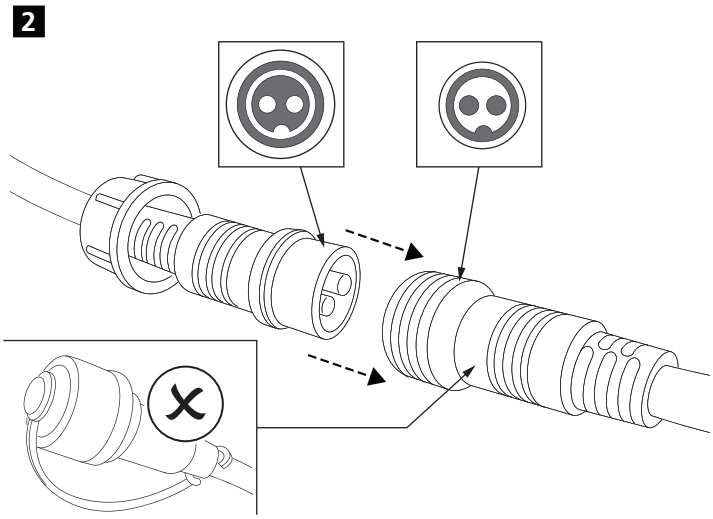
2

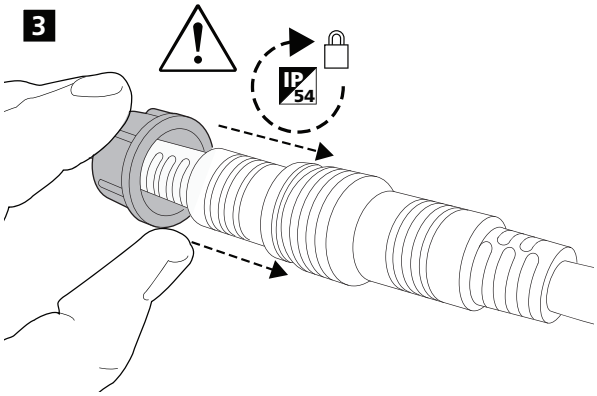
3
IP 54

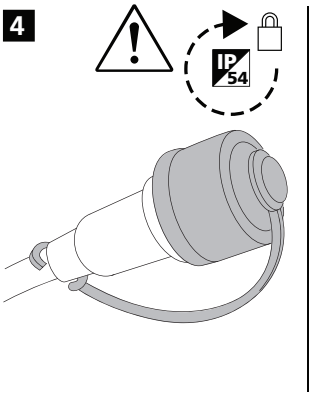
4
IP 54

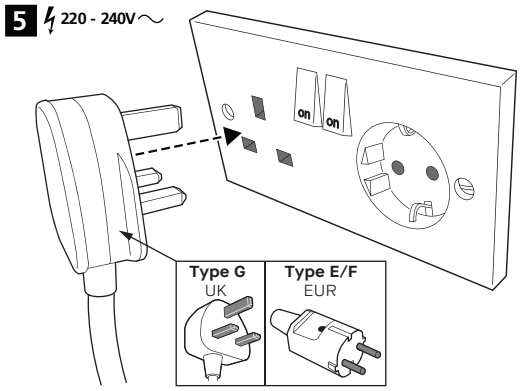
5
220 - 240V
on
on
Type G
UK
Type E/F
EUR

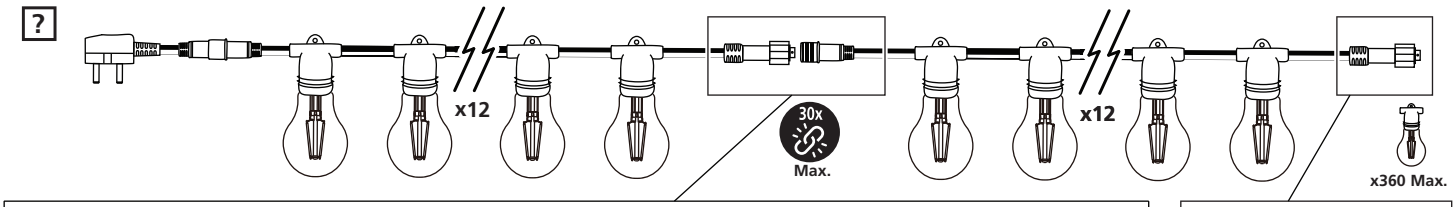
?
x12
30x
Max.
x12
x360 Max.

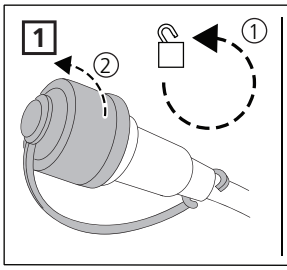
1
①
②

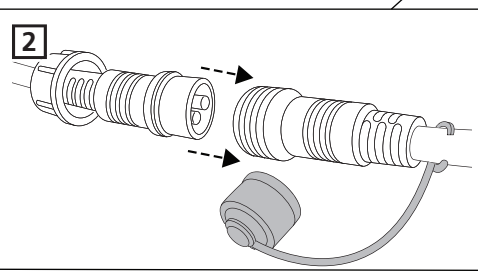
2

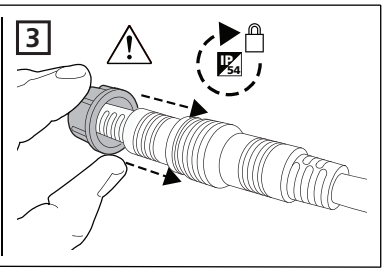
3
IP 54

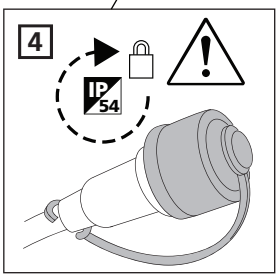
4
IP 54